Work Order ID 72981

Tuesday, August 23, 2011 8:29:11 AM

Ship Aug 31

Item ID: D4032-041 **Accept** **Setup Start**

Revision ID: **Stop**

Item Name: Short Basket Assembly (350)

Start Date: 8/23/2011 **Start Qty:** 1.00 **Cust Item ID:**

Required Date: 8/29/2011 **Req'd Qty:** 1.00 **Customer:**

Reference:

Approvals: **Process Plan:** **Date:** 08-23 **Tooling:** **Date:** **Run Start**

QC: **Date:** **SPC (Y/N):** **Date:** **Stop**

Sequence ID/ Work Center ID	Operation Description	Set Up/ Run Hours	Tool ID	Tool #	Plan Code	Accept Qty	Reject Qty	Reject Number	Insp. Stamp
Draw Nbr / **Revision Nbr**									
D4032 / D									
100	Pick Kit	0.00							
Packaging	**Memo**	0.00							
Packaging									
110	Assemble as per dwg	0.00							
HandFinish	**Memo**	0.00							
Hand Finishing	****Mask label plate to size of D4086 label, use scotchbrite red pad to lightly sand area for label, apply label ****								
120	QC5- Inspect part completeness to step on W/O	0.00							
QC	**Memo**	0.00							
Quality Control									

11/8/2008

11/09/02

Dart Aerospace Ltd

W/O:		WORK ORDER CHANGES					
DATE	STEP	PROCEDURE CHANGE	By	Date	Qty	Approval Chief Eng / Prod Mgr	Approval QC Inspector

Part No: _____ **PAR #:** _____ **Fault Category:** _____ **NCR:** Yes No **DQA:** _____ **Date:** _____

Resolution: _____ **Disposition:** _____ **QA: N/C Closed:** _____ **Date:** _____

NCR:		WORK ORDER NON-CONFORMANCE (NCR)						
DATE	STEP	Description of NC Section A	Corrective Action Section B			Verification Section C	Approval Chief Eng	Approval QC Inspector
			Initial Chief Eng	Action Description Chief Eng	Sign & Date			

NOTE: Date & initial all entries

H:\fFORMS\Quality Assurance\approved QA\NCRWO RevE

Work Order ID 72981

Tuesday, August 23, 2011 8:29:11 AM

Item ID: D4032-041

Revision ID:

Item Name: Short Basket Assembly (350)

Start Date: 8/23/2011 **Start Qty:** 1.00

Required Date: 8/29/2011 **Req'd Qty:** 1.00

Reference:

Accept

Setup Start

Stop

Cust Item ID:

Customer:

Run Start

Stop

Approvals: **Process Plan:** **Date:** **Tooling:** **Date:**

QC: **Date:** **SPC (Y/N):** **Date:**

Sequence ID/ Work Center ID	Operation Description	Set Up/ Run Hours	Tool ID	Tool #	Plan Code	Accept Qty	Reject Qty	Reject Number	Insp. Stamp
130	Identify as per dwg & Stock Location:_____	0.00							
Packaging	**Memo**	0.00							
Packaging									
140	QC21- Final Inspection - Work Order Release	0.00							
QC	**Memo**	0.00							
Quality Control									

PPR 72980

11/9/2

11/9/2

mf 11-09-02

Dart Aerospace Ltd

W/O:		WORK ORDER CHANGES					
DATE	STEP	PROCEDURE CHANGE	By	Date	Qty	Approval Chief Eng / Prod Mgr	Approval QC Inspector

Part No: _____ **PAR #:** _____ **Fault Category:** _____ **NCR:** Yes No **DQA:** _____ **Date:** _____

Resolution: _____ **Disposition:** _____ **QA: N/C Closed:** _____ **Date:** _____

NCR:		WORK ORDER NON-CONFORMANCE (NCR)						
DATE	STEP	Description of NC Section A	Corrective Action Section B			Verification Section C	Approval Chief Eng	Approval QC Inspector
			Initial Chief Eng	Action Description Chief Eng	Sign & Date			

NOTE: Date & initial all entries

Picklist Print

Tuesday, August 23, 2011 8:29:16 AM

Work Order ID: 72981

Parent Item: D4032-041

Parent Item Name: Short Basket Assembly (350)

Start Date: 8/23/2011 **Required Date:** 8/29/2011

Start Qty: 1.00 **Required Qty:** 1.00

Comments: IPP RevA: new issue DD 09.12.02 verified by:EC IPP Rev:B as per PA3 DD 10.03.10 verified by:EC IPP Rev:C as per RevA DD 10.03.23 verified by:EC IPP Rev:D as per dwg revC DD 10.04.20 verified by:EC IPP Rev:E as per dwg revD DD 10.08.18 verified by:EC

Component Item ID/ Item Name	Replacement Item ID	Mfg/ Purch	Bin Item	Primary Location	Last Location	Route Seq ID	Unit of Measure	Qty on Hand	Qty per Kit	Total Qty	Qty Issued	Date Issued	Status
D4086-232 Placard, Max Load		Manufactured	No			100	Each	5.0000	1	1			
				Location		**Loc Qty**		**Loc Code**					
				ST122		5							
					66274	1							
					72052	4							
D2530 Handle Weldment		Manufactured	No			100	Each	16.0000	1	1			
				Location		**Loc Qty**		**Loc Code**					
				ST506		15							
					70850	5							
					72166	10							
				ST508		1							
					69318	1							
D2535 Spring		Manufactured	No			100	Each	95.0000	2	2			
				Location		**Loc Qty**		**Loc Code**					
				ST504		95							
					71117	95							

Dart Aerospace Ltd

W/O:		WORK ORDER CHANGES					
DATE	STEP	PROCEDURE CHANGE	By	Date	Qty	Approval Chief Eng / Prod Mgr	Approval QC Inspector

Part No: _____ **PAR #:** _____ **Fault Category:** _____ **NCR:** Yes No **DQA:** _____ **Date:** _____

Resolution: _____ **Disposition:** _____ **QA: N/C Closed:** _____ **Date:** _____

NCR:		WORK ORDER NON-CONFORMANCE (NCR)						
DATE	STEP	Description of NC Section A	Corrective Action Section B			Verification Section C	Approval Chief Eng	Approval QC Inspector
			Initial Chief Eng	Action Description Chief Eng	Sign & Date			

NOTE: Date & initial all entries

H:\fFORMS\Quality Assurance\approved QA\NCRWO RevE

Picklist Print

Tuesday, August 23, 2011 8:29:16 AM

Work Order ID: 72981

Parent Item: D4032-041

Parent Item Name: Short Basket Assembly (350)

Start Date: 8/23/2011 **Required Date:** 8/29/2011

Start Qty: 1.00 **Required Qty:** 1.00

D2537 Bushing	Manufactured	No	100	Each	39.0000	2	2	

Location	Loc Qty	Loc Code
ST504	39	
71853	39	

D3917-3 Washer	Manufactured	No	100	Each	25.0000	6	6	

Location	Loc Qty	Loc Code
ST092	25	
69896	3	
72142	22	

D3953-3 Gas Spring Stud, Lid	Manufactured	No	100	Each	0.0000	2	2	B71875
D3953-7 Spring Spacer	Manufactured	No	100	Each	19.0000	2	2	

Location	Loc Qty	Loc Code
ST096	19	
65053	4	
71885	15	

D3953-9 Gas Spring Washer	Manufactured	No	100	Each	22.0000	2	2	8/29

Location	Loc Qty	Loc Code
ST096	22	
69025	4	
71869	18	

Dart Aerospace Ltd

W/O:		WORK ORDER CHANGES					
DATE	STEP	PROCEDURE CHANGE	By	Date	Qty	Approval Chief Eng / Prod Mgr	Approval QC Inspector

Part No: _____ **PAR #:** _____ **Fault Category:** _____ **NCR:** Yes No **DQA:** _____ **Date:** _____

Resolution: _____ **Disposition:** _____ **QA: N/C Closed:** _____ **Date:** _____

NCR:		WORK ORDER NON-CONFORMANCE (NCR)						
DATE	STEP	Description of NC Section A	Corrective Action Section B			Verification Section C	Approval Chief Eng	Approval QC Inspector
			Initial Chief Eng	Action Description Chief Eng	Sign & Date			

NOTE: Date & initial all entries

Picklist Print

Tuesday, August 23, 2011 8:29:17 AM

Work Order ID: 72981

Parent Item: D4032-041

Parent Item Name: Short Basket Assembly (350)

Start Date: 8/23/2011 **Required Date:** 8/29/2011

Start Qty: 1.00 **Required Qty:** 1.00

D3953-17 Gas Spring Spacer	Manufactured	No	100	Each	10.0000	2	2	

Location	Loc Qty	Loc Code
ST096	10	
~~71870~~	10	

D3953-19 Gas Spring Bracket	Manufactured	No	100	Each	7.0000	1	1	

Location	Loc Qty	Loc Code
ST096	7	
59213	1	
68462	6	

D3953-21 Gas Spring Bracket	Manufactured	No	100	Each	6.0000	1	1	

Location	Loc Qty	Loc Code
ST096	6	
68463	6	

D3969-3 Spring (Basket Lid)	Manufactured	No	100	Each	7.0000	1	1	

Location	Loc Qty	Loc Code
ST272	7	
64285	1	
68925	6	

D4017-041 Short Basket Base Assembly (350)	Manufactured	No	100	Each	0.0000	1	1	

B72982 (10) 11/09/02

Dart Aerospace Ltd

W/O:		WORK ORDER CHANGES					
DATE	STEP	PROCEDURE CHANGE	By	Date	Qty	Approval Chief Eng / Prod Mgr	Approval QC Inspector

Part No: _____ **PAR #:** _____ **Fault Category:** _____ **NCR:** Yes No **DQA:** _____ **Date:** _____

Resolution: _____ **Disposition:** _____ **QA: N/C Closed:** _____ **Date:** _____

NCR:		WORK ORDER NON-CONFORMANCE (NCR)						
DATE	STEP	Description of NC Section A	Corrective Action Section B			Verification Section C	Approval Chief Eng	Approval QC Inspector
			Initial Chief Eng	Action Description Chief Eng	Sign & Date			

NOTE: Date & initial all entries

Picklist Print

Tuesday, August 23, 2011 8:29:17 AM

Work Order ID: 72981

Parent Item: D4032-041

Parent Item Name: Short Basket Assembly (350)

Start Date: 8/23/2011 **Required Date:** 8/29/2011

Start Qty: 1.00 **Required Qty:** 1.00

D4018-041 Short Basket Lid Assembly (350)	Manufactured	No	100	Each	0.0000	1	1	B72983 (12) 11/09/02
AN3-14A Bolt	Purchased	No	100	Each	88.0000	4	4	

Location		Loc Qty	Loc Code
ST352		88	
	117872	88	

AN3-16A Bolt	Purchased	No	100	Each	181.0000	2	2	

Location		Loc Qty	Loc Code
ST352		181	
	117441	81	
	118628	100	

AN4-12 Bolt	Purchased	No	100	Each	83.0000	3	3	

Location		Loc Qty	Loc Code
ST357		83	
	117514	33	
	118626	50	

AN5-17A Bolt	Purchased	No	100	Each	84.0000	4		1/8/29

Location		Loc Qty	Loc Code
ST337		40	
	118422	40	
ST339		44	
	117872	44	

Dart Aerospace Ltd

W/O:		WORK ORDER CHANGES					
DATE	STEP	PROCEDURE CHANGE	By	Date	Qty	Approval Chief Eng / Prod Mgr	Approval QC Inspector

Part No: _____ **PAR #:** _____ **Fault Category:** _____ **NCR:** Yes No **DQA:** _____ **Date:** _____

Resolution: _____ **Disposition:** _____ **QA: N/C Closed:** _____ **Date:** _____

NCR:		WORK ORDER NON-CONFORMANCE (NCR)						
DATE	STEP	Description of NC Section A	Corrective Action Section B			Verification Section C	Approval Chief Eng	Approval QC Inspector
			Initial Chief Eng	Action Description Chief Eng	Sign & Date			

NOTE: Date & initial all entries

H:\fFORMS\Quality Assurance\approved QA\NCRWO RevE

Picklist Print

Tuesday, August 23, 2011 8:29:17 AM

Work Order ID: 72981

Parent Item: D4032-041

Parent Item Name: Short Basket Assembly (350)

Start Date: 8/23/2011 **Required Date:** 8/29/2011

Start Qty: 1.00 **Required Qty:** 1.00

AN310-4 NUT	Purchased	No	100	Each	54.0000	3	3	

Location	Loc Qty	Loc Code	
ST324	54		
118078	4		
118112	50		3

AN310C4 Nut	Purchased	No	100	Each	56.0000	2	2	

Location	Loc Qty	Loc Code	
ST324	56		
116741	1		
117395	25		2
118090	10		
118626	20		

MS21042L3 Nut	Purchased	No	100	Each	1,857.000	6	6	11/8/29

Location	Loc Qty	Loc Code	
ST300	1857		
117441	212		6
117601	400		
117885	245		
118451	1000		

Dart Aerospace Ltd

W/O:		WORK ORDER CHANGES					
DATE	STEP	PROCEDURE CHANGE	By	Date	Qty	Approval Chief Eng / Prod Mgr	Approval QC Inspector

Part No: _____ **PAR #:** _____ **Fault Category:** _____ **NCR:** Yes No **DQA:** _____ **Date:** _____

Resolution: _____ **Disposition:** _____ **QA: N/C Closed:** _____ **Date:** _____

NCR:		WORK ORDER NON-CONFORMANCE (NCR)						
DATE	STEP	Description of NC Section A	Corrective Action Section B			Verification Section C	Approval Chief Eng	Approval QC Inspector
			Initial Chief Eng	Action Description Chief Eng	Sign & Date			

NOTE: Date & initial all entries

Picklist Print

Tuesday, August 23, 2011 8:29:17 AM

Work Order ID: 72981

Parent Item: D4032-041

Parent Item Name: Short Basket Assembly (350)

Start Date: 8/23/2011 **Required Date:** 8/29/2011

Start Qty: 1.00 **Required Qty:** 1.00

MS21042L5 Nut	Purchased	No	100	Each	1,185.000	4	4	

Location		Loc Qty	Loc Code	
ST300		1185		
	116105	5		
	116548	53		
	117441	498		4
	117591	43		
	117611	90		
	118179	496		

MS24665-151 Cotter Pin	Purchased	No	100	Each	430.0000	3	3	

Location		Loc Qty	Loc Code	
ST309		430		
	17566	430		3

MS24665-300 Cotter Pin	Purchased	No	100	Each	254.0000	2	2	11/8/2011

Location		Loc Qty	Loc Code	
GA		200		
	118234	200		
ST309		54		
	116823	54		2

Dart Aerospace Ltd

W/O:		WORK ORDER CHANGES					
DATE	STEP	PROCEDURE CHANGE	By	Date	Qty	Approval Chief Eng / Prod Mgr	Approval QC Inspector

Part No: _____ **PAR #:** _____ **Fault Category:** _____ **NCR:** Yes No **DQA:** _____ **Date:** _____

Resolution: _____ **Disposition:** _____ **QA: N/C Closed:** _____ **Date:** _____

NCR:		WORK ORDER NON-CONFORMANCE (NCR)						
DATE	STEP	Description of NC Section A	Corrective Action Section B			Verification Section C	Approval Chief Eng	Approval QC Inspector
			Initial Chief Eng	Action Description Chief Eng	Sign & Date			

NOTE: Date & initial all entries

Picklist Print

Tuesday, August 23, 2011 8:29:17 AM

Work Order ID: 72981

Parent Item: D4032-041

Parent Item Name: Short Basket Assembly (350)

Start Date: 8/23/2011 **Required Date:** 8/29/2011

Start Qty: 1.00 **Required Qty:** 1.00

NAS1149F0432P Washer	Purchased	No	100	Each	264.0000	6	6	

Location	Loc Qty	Loc Code
ST275	264	
117291	8	
118179	56	
118612	200	

NAS1149C0432R Washer	Purchased	No	100	Each	4,636.000	2	2	

Location	Loc Qty	Loc Code
ST297	4636	
116900	18	
117291	4618	

NAS1149F0332P WASHER	Purchased	No	100	Each	216.0000	8	8	

Location	Loc Qty	Loc Code
ST275	216	
117735	87	
118354	126	
17317	3	

NAS1149F0563P Washer	Purchased	No	100	Each	192.0000	4	4	11/8/2011

Location	Loc Qty	Loc Code
ST297	192	
117735	192	

Dart Aerospace Ltd

W/O:		WORK ORDER CHANGES					
DATE	STEP	PROCEDURE CHANGE	By	Date	Qty	Approval Chief Eng / Prod Mgr	Approval QC Inspector

Part No: _____ **PAR #:** _____ **Fault Category:** _____ **NCR:** Yes No **DQA:** _____ **Date:** _____

Resolution: _____ **Disposition:** _____ **QA: N/C Closed:** _____ **Date:** _____

NCR:		WORK ORDER NON-CONFORMANCE (NCR)						
DATE	STEP	Description of NC Section A	Corrective Action Section B			Verification Section C	Approval Chief Eng	Approval QC Inspector
			Initial Chief Eng	Action Description Chief Eng	Sign & Date			

NOTE: Date & initial all entries

H:\fFORMS\Quality Assurance\approved QA\NCRWO RevE

ITEM	-041 QTY.	-043 QTY.	P/N	DESCRIPTION
	X		D4032-041	SHORT BASKET ASSY (350)
		X	D4032-043	SHORT BASKET ASSY, LIGHT LID (350)
1	1	1	D2530	HANDLE WELDMENT
2	2	2	D2535	SPRING
3	2	2	D2537	BUSHING
4	6	6	D3917-3	WASHER
5	2	2	D3953-3	GAS SPRING STUD, LID
6	2	2	D3953-7	GAS SPRING SPACER
7	2	2	D3953-9	GAS SPRING WASHER
8	2	2	D3953-17	GAS SPRING SPACER
9	1	1	D3953-19	GAS SPRING BRACKET
10	1	1	D3953-21	GAS SPRING BRACKET
11	1	1	D3969-3	SPRING
12	1	1	D4017-041	SHORT BASKET BASE ASSY (350)
13	1		D4018-041	SHORT BASKET LID ASSY (350)
14		1	D4019-041	LIGHT LID SHORT BASKET ASSY
15	4	4	AN3-14A	BOLT
16	2		AN3-16A	BOLT
17		2	AN3-20A	BOLT
18	3	3	AN4-12	BOLT (DRILLED)
19	4	2	AN5-17A	BOLT
20		2	AN5-21A	BOLT
21	3	3	AN310-4	NUT, CASTELLATED
22	2	2	AN310C4	NUT, CASTELLATED
23	6	6	MS21042L3	NUT
24	4	4	MS21042L5	NUT
25	3	3	MS24665-151	COTTER PIN
26	2	2	MS24665-300	COTTER PIN
27	6	6	NAS1149F0432P	WASHER
28	2	2	NAS1149C0432R	WASHER
29	8	8	NAS1149F0332P	WASHER
30	4	4	NAS1149F0563P	WASHER

D

SHOP COPY
RETURN TO
ENGINEERING
UNCONTROLLED COPY
SUBJECT TO AMENDMENT
WITHOUT NOTICE
WORK ORDER
NO. 7298.1
pg 11 of 23

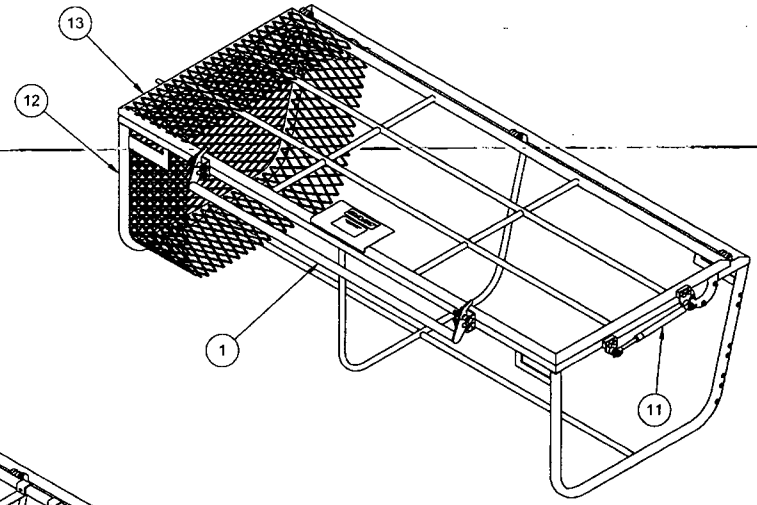

D4032-041 SHORT BASKET ASSY (350)
(MESH SHOWN LOCALLY FOR CLARITY)

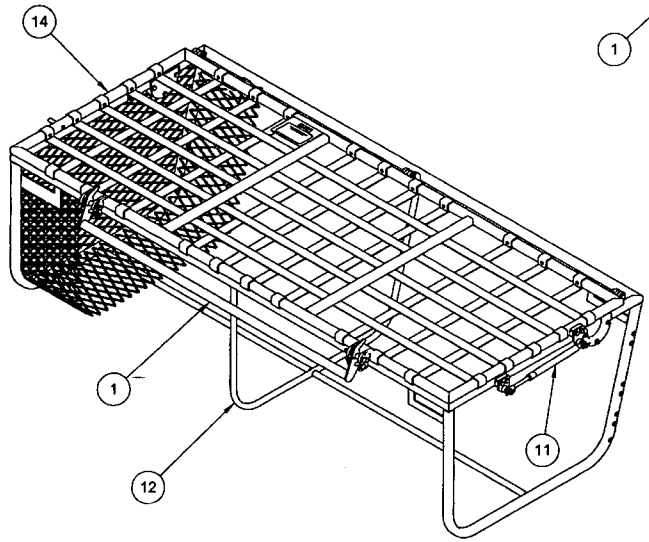

D4032-043 SHORT BASKET ASSY, LIGHT LID (350)
(MESH SHOWN LOCALLY FOR CLARITY)

RELEASED
10.08.12
ECN 10-596

NOTES:
1) MATERIAL: N/A
2) FINISH: NONE
3) TOLERANCES: PER DART QSI 018 UNLESS OTHERWISE NOTED
4) UNITS: INCHES UNLESS OTHERWISE NOTED
5) BREAK SHARP EDGES: N/A
6) IDENTIFICATION: N/A
7) WEIGHT: -041: 56 lbs APPROX
-043: 45 lbs APPROX

REV.	DESCRIPTION	BY	DATE
D	QTY FOR ITEMS #28, #29 & #30 UNDER -043 WERE MISSING (B8-1); QTY FOR ITEM #3 WAS 4 (D6-1), ONLY 2 ARE REQUIRED, AFFECTS SECTION C-C (D3-3).	MB	10.07.23
C	AN5-21A BOLT WAS AN5-19A BOLT: BOM & (D3-3)	JPH	10.04.06
B	ITEM 15 D4086-232 & 16 D4086-243 REMOVED; ITEM RENUMBERED AS REQD. PLACARDS REMOVED (C6-2); TOP VIEW DETAIL REMOVED (C2-2)	JPH	10.03.25
A	NEW ISSUE	JPH	10.03.08

DESIGN	AJS	DART AEROSPACE LTD HAWKESBURY, ONTARIO, CANADA
DRAWN		
CHECKED		DRAWING NO. D4032 — REV. D — SHEET 1 OF 2
MFG. APPR.	JFS	
APPROVED		TITLE: SHORT BASKET ASSY (350) — SCALE: NTS
DE APPR.		
DATE	10.07.23	

COPYRIGHT © 2010 BY DART AEROSPACE LTD
THIS DOCUMENT IS PRIVATE AND CONFIDENTIAL AND IS SUPPLIED ON THE EXPRESS CONDITION THAT IT IS NOT TO BE USED FOR ANY PURPOSE OR COPIED OR COMMUNICATED TO ANY OTHER PERSON WITHOUT WRITTEN PERMISSION FROM DART AEROSPACE LTD.

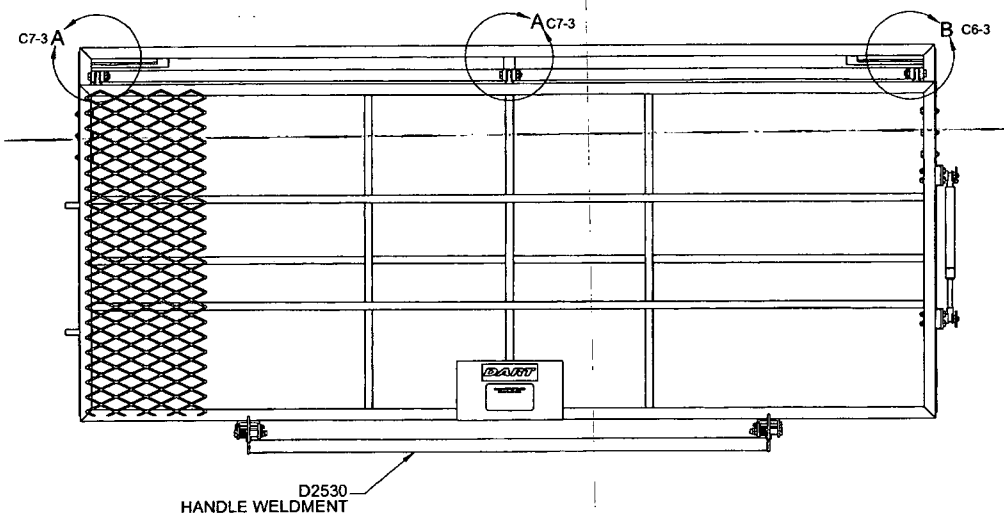

12987

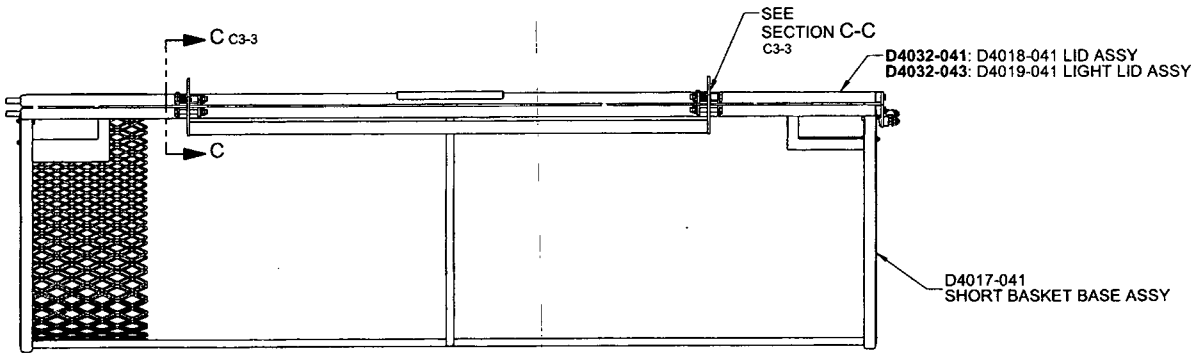

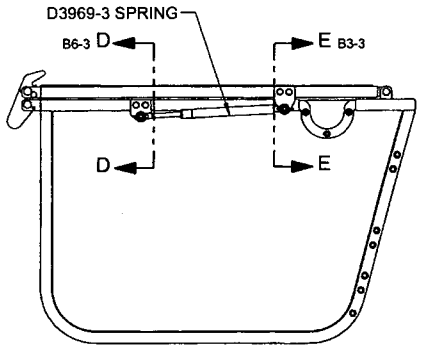

RELEASED 10.08.12

D4032-041 SHORT BASKET ASSY (350) (SHOWN)
(MESH SHOWN LOCALLY OR REMOVED FOR CLARITY)

D4032-043 SHORT BASKET ASSY, LIGHT LID (350)
(MESH SHOWN LOCALLY FOR CLARITY)

DESIGN	A.J.S	**DART AEROSPACE LTD** HAWKESBURY, ONTARIO, CANADA
DRAWN		
CHECKED		DRAWING NO. D4032 — REV. D — SHEET 2 OF 3
MFG. APPR.	J.F.S. for J.L.A.	
APPROVED		TITLE: SHORT BASKET ASSY (350) — SCALE: NTS
DE APPR.		
DATE	10.07.23	

COPYRIGHT © 2010 BY DART AEROSPACE LTD
THIS DOCUMENT IS PRIVATE AND CONFIDENTIAL AND IS SUPPLIED ON THE EXPRESS CONDITION THAT IT IS NOT TO BE USED FOR ANY PURPOSE OR COPIED OR COMMUNICATED TO ANY OTHER PERSON WITHOUT WRITTEN PERMISSION FROM DART AEROSPACE LTD.

72987

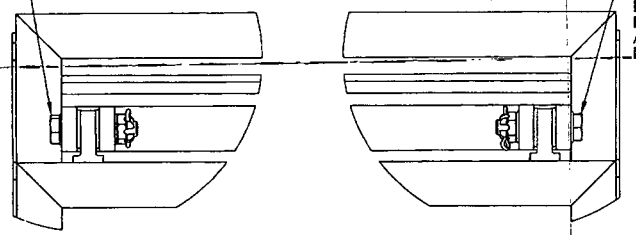

DETAIL A D8-2 D6-2

DETAIL B D4-2

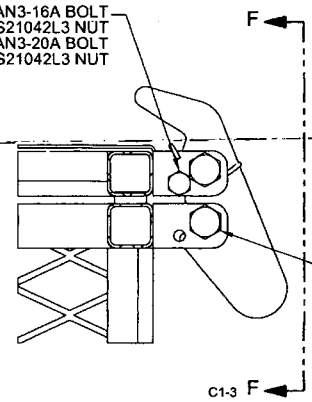

SECTION C-C B5-2 B7-2

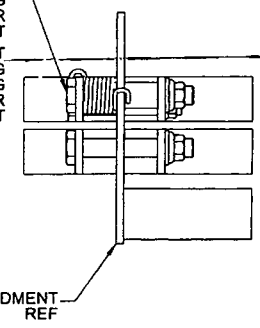

VIEW F-F C3-3

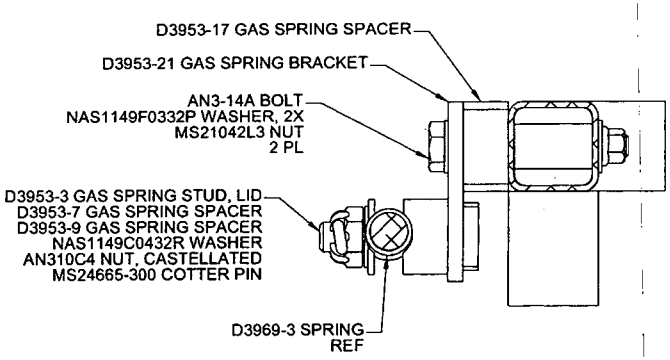

SECTION D-D B2-2

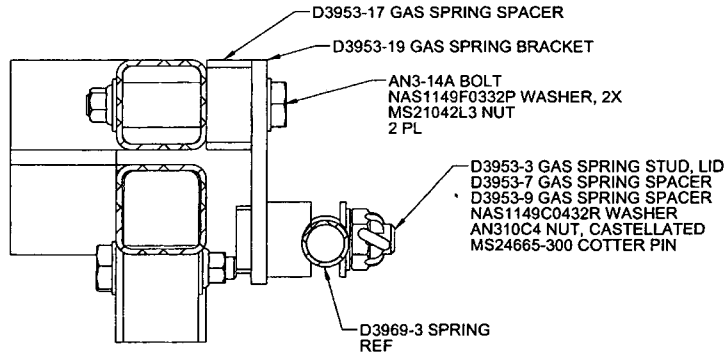

SECTION E-E B1-2

RELEASED 10.08.17

DESIGN	AJS	**DART AEROSPACE LTD** HAWKESBURY, ONTARIO, CANADA
DRAWN		
CHECKED		DRAWING NO. D4032 — REV. D — SHEET 3 OF 3
MFG. APPR.	JFS	
APPROVED		TITLE — SCALE
DE APPR.		SHORT BASKET ASSY (350) — NTS
DATE	10.07.23	

COPYRIGHT © 2010 BY DART AEROSPACE LTD
THIS DOCUMENT IS PRIVATE AND CONFIDENTIAL AND IS SUPPLIED ON THE EXPRESS CONDITION THAT IT IS NOT TO BE USED FOR ANY PURPOSE OR COPIED OR COMMUNICATED TO ANY OTHER PERSON WITHOUT WRITTEN PERMISSION FROM DART AEROSPACE LTD